| REVISIONS | | | | |
|---|---|---|---|---|
| ZONE | REV | DESCRIPTION | DATE | APPROVED |
| | A | WAS 46019 | 19OCT98 | |
| | B | WAS DWG NO 40860 | 15OCT03 | |

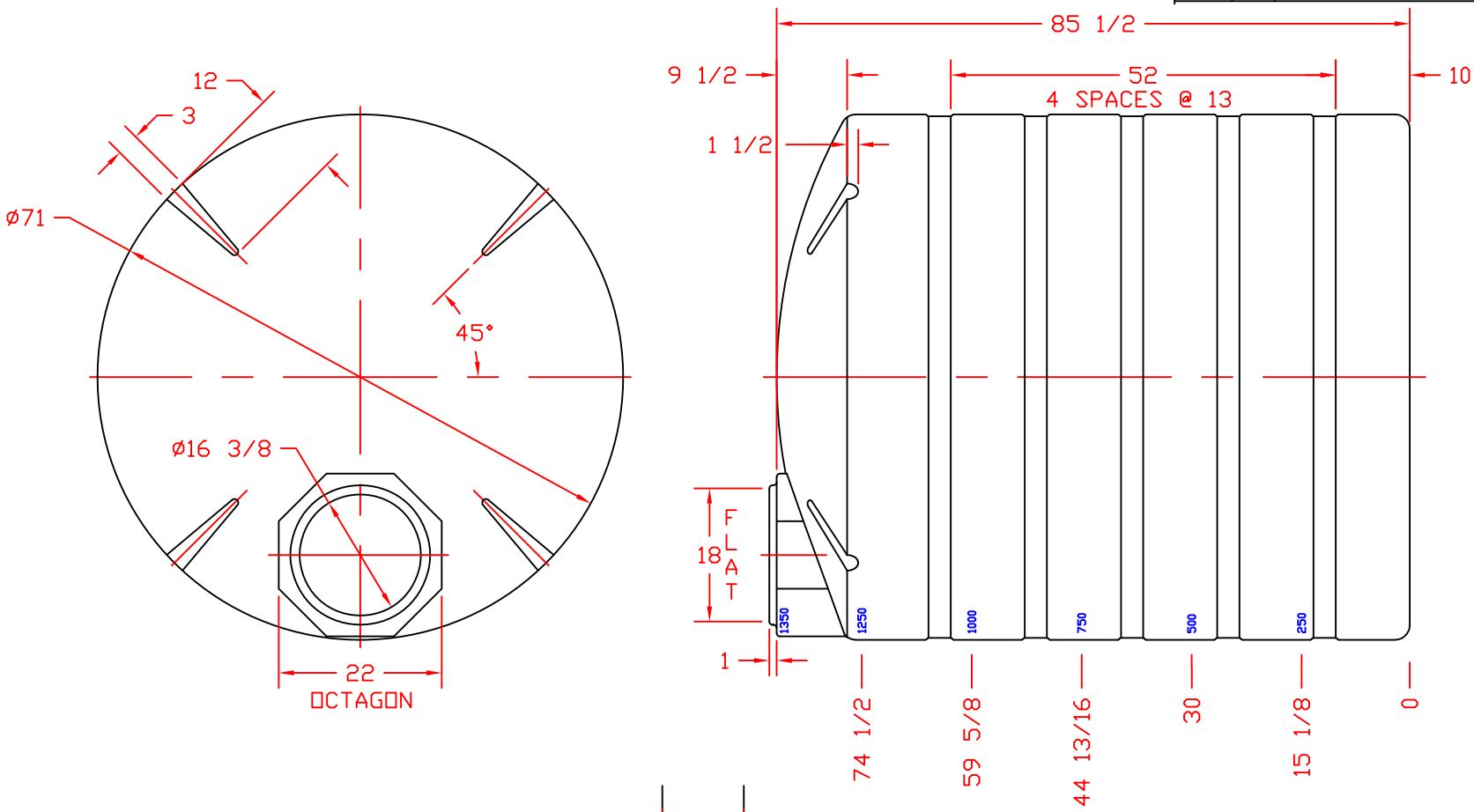


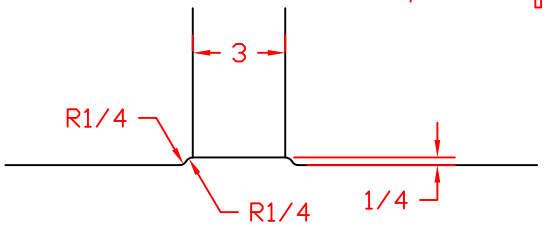


RIB DETAIL, 1/4 SCALE

NORWESCO
ST. BONIFACIUS, MN

1350 GALLON
VERTICAL TANK

| | | | | |
|---|---|---|---|---|
| JTP 17JAN96 | SIZE B | FSCM NO. | DWG NO. (B)(A) | REV B |
| | SCALE 1/16 | | SHEET | |